Fastening Technology

BAM MC-TL-025-P-1
Order Code: BAM0204

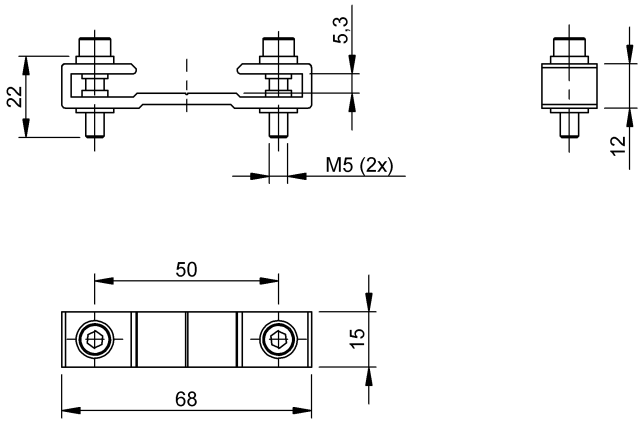

Basic features

Scope of delivery	Mounting clamp including screws
Use	for BTL magnetostrictive linear position sensor

Material

Housing material	Aluminum, anodized, black PA 6.6
Surface protection	anodized, black

Mechanical data

Dimension	15 x 12 x 68 mm
Mounting part	Screws, clamps